POWER ELECTRIC

The World's Largest Source of Small Electric Motors

24v Worm Gear Motor

Power Electric 4.00 torque used in medical equipment applications

Design Data	
Commutation	Brushed
Direction of Rotation	Bi-Directional
Bearing Type	A:Ball - B:Sleeve

Characteristic Curves

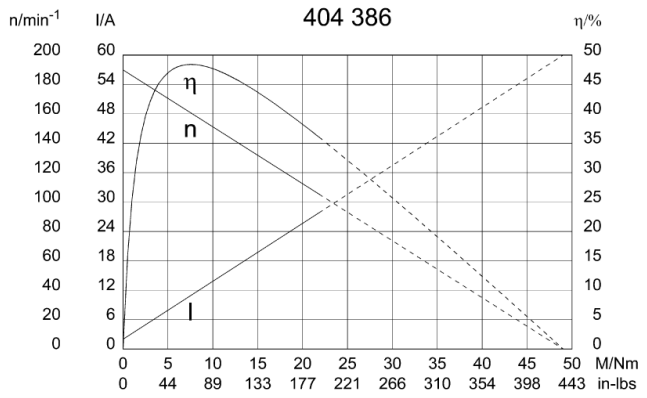

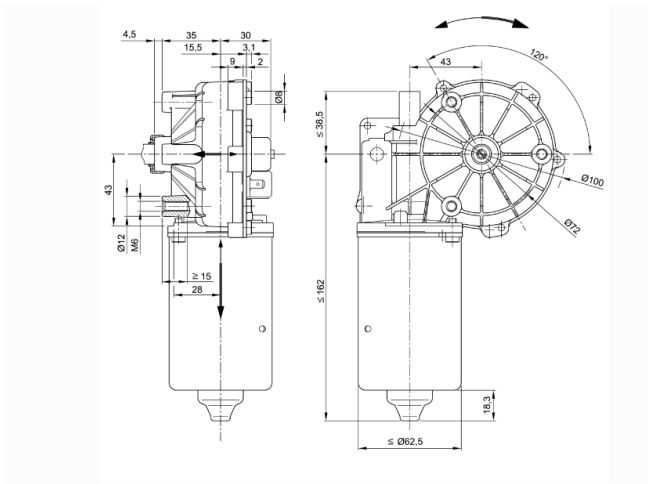

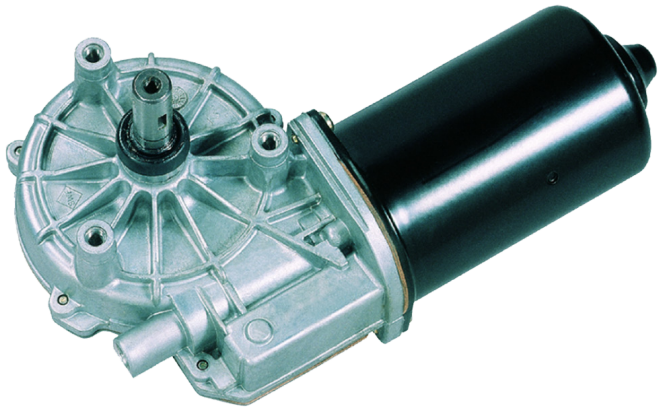

Performance Data		
Rated voltage [V]	U_n	24
Nominal torque [Nm]	M_N	4.00
No-load speed [min^{-1}]	n_o	190.0
Nominal power [W]	P_N	73.1
Nominal current [A]	I_N	7.0
Nominal force [kN]	F_N	0.00
Duty cycle		s1

Sensor Data	
Pulses	0
Output channels	0

Other Data	
Gear ratio	103/4
Gear wheel material	plastic
Suppression components	4.7µH, 1nF
Enclosure class	IP 40
Weight (kg)	1.700

15300 25th Avenue North
Plymouth, MN 55447
763-553-1090
Fax 763-553-1242
www.powerelectric.com