POWER ELECTRIC

The World's Largest Source of Small Electric Motors

24v Worm Gear Motor 404603

Power Electric 1.00 torque used in medical equipment applications and more

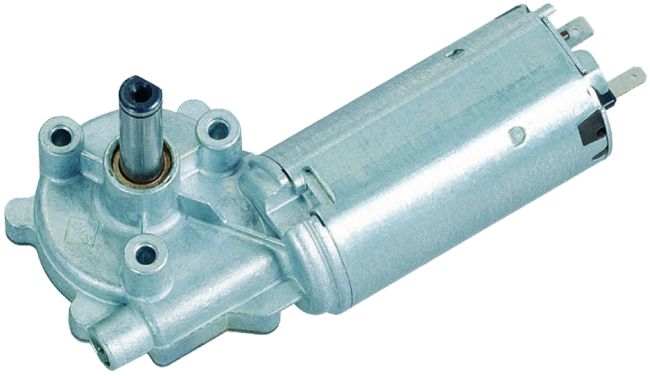

Characteristic Curves

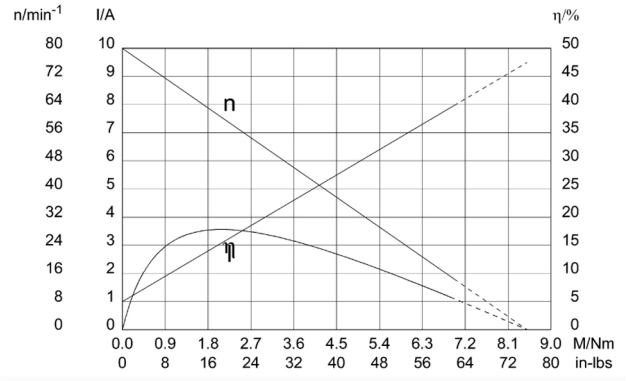

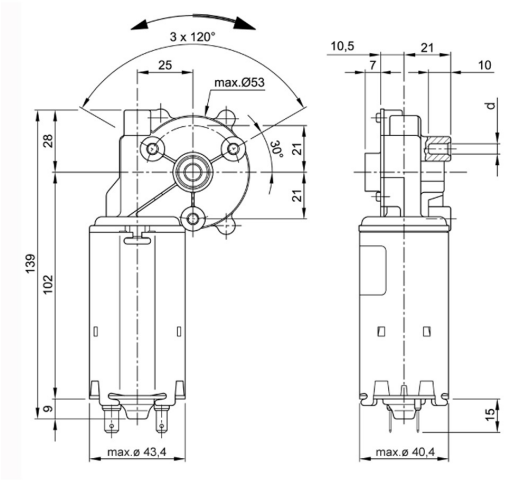

Performance Data		
Rated voltage [V]	U_n	24
Nominal torque [Nm]	M_N	1.00
No-load speed [min^{-1}]	n_o	80.0
Nominal power [W]	P_N	7.39
Nominal current [A]	I_N	2.0
Nominal force [kN]	F_N	0.00
Duty cycle		s3

Sensor Data	
Pulses	0
Output channels	0

Other Data	
Gear ratio	62/1
Gear wheel material	plastic
Suppression components	7,5µH, 1nF
Enclosure class	IP 30
Weight (kg)	0.710

15300 25th Avenue North
Plymouth, MN 55447
763-553-1090
Fax 763-553-1242
www.powerelectric.com